GENERAL INFORMATION

Project Name: _____

Item: _____

Quantity: _____

Model: ZG9935

Length: _____

STANDARD SPECIFICATIONS

- ☐ 1" Diameter Stainless Steel Posts
- ☐ 3/8" Clear Tempered Front Glass Panels (max. span 66")
- ☐ 3/8" Clear Tempered Glass Top Shelf (max span 66")
- ☐ Max Center Line Post-to-Post Span = 78"
- ☐ 1/4" Clear Tempered Glass End Panels
- ☐ 1" Radius Glass Corners

OPTIONS AND ACCESSORIES

NSF-LISTED FINISH OPTIONS

- ☐ Brushed Aluminum (Standard)
- ☐ Stainless Steel #8 (Chrome)
- ☐ Gloss Black
- ☐ Matte Black
- ☐ Prismatic Brass
- ☐ Wrinkle Black
- ☐ Statuary Bronze
- ☐ Smoked Copper
- ☐ Other _____

GLASS FINISHES

- ☐ Clear (Standard)
- ☐ Low-Iron
- ☐ Frosted
- ☐ Frosted Logo/Imprint
- ☐ Pattern

GLASS CORNERS

- ☐ 1" Radius Corners (Standard)
- ☐ Square Corners

GLASS PANEL OPTIONS

- ☐ 1/4" (max. span 54" *Front Glass Only*)
- ☐ 3/8" (max. span 66") (Standard)

MOUNTING STYLES (SELECT ONE)

See installation page for more details.

Above Counter: Stainless Steel Counter

Under Counter: Stainless Steel Counter

(Requires Under-Counter Reinforcement & Access)

Above Counter: Millwork Counter

Under Counter: Millwork Counter

Approval Drawings Required
Specifications subject to change without notice.

ZG9935 ClearSpan

Self Serve w/Top Shelf, U-Shaped End Posts w/ Shortened Center Post

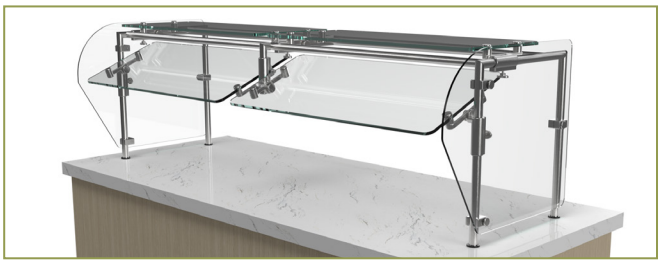

To meet NSF guidelines, end panels are included on all BSI quotations unless specifically excluded. (See End Panel Page for More Details.)

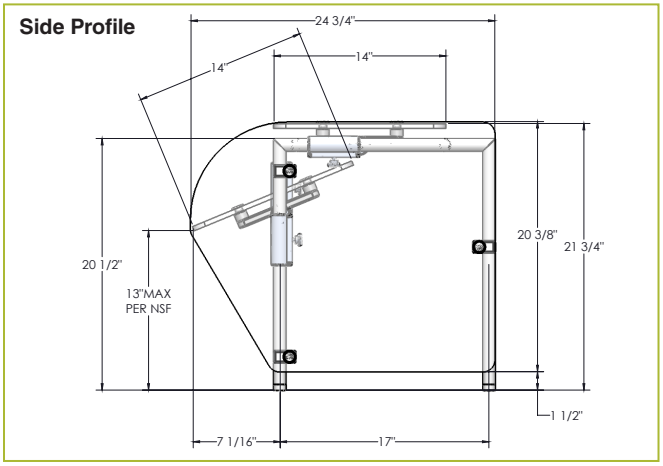

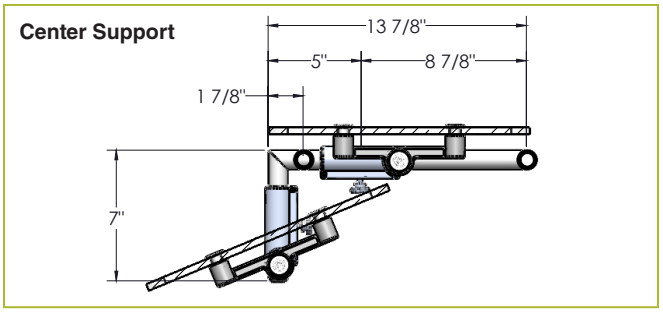

LIGHT AND WARMER OPTIONS

Model #	Description
☐ 2580	BSI Slimline LED Light
☐ 790	BSI Stealth Heat-Only Warmer
☐ 705	BSI Stealth Heat-Light Combo
☐ 500	BSI Stealth Heat-Light-Heat Combo

All BSI light and warmer units are UL Listed. See light and warmer spec sheets for detailed information. Axces is also available with other manufacturers' heat and light units. Contact BSI for details.

- ☐ SS1: EZ Mount 2" x 8" Flange
- ☐ SSU3-H: Heavy-Duty Flange
- ☐ SSU3-N: Narrow Flange
- ☐ SSU5-H: Heavy-Duty Flange
- ☐ SSU5-N: Narrow Flange
- ☐ MW1: Heavy-Duty Flange
- ☐ MW2: Narrow Flange
- ☐ MWU3: Narrow Flange
- ☐ MWU5: Heavy-Duty Flange
- ☐ MWU4: Compression Installation (not recommended for solid surfaces)

NSF COMPONENTS

11.23